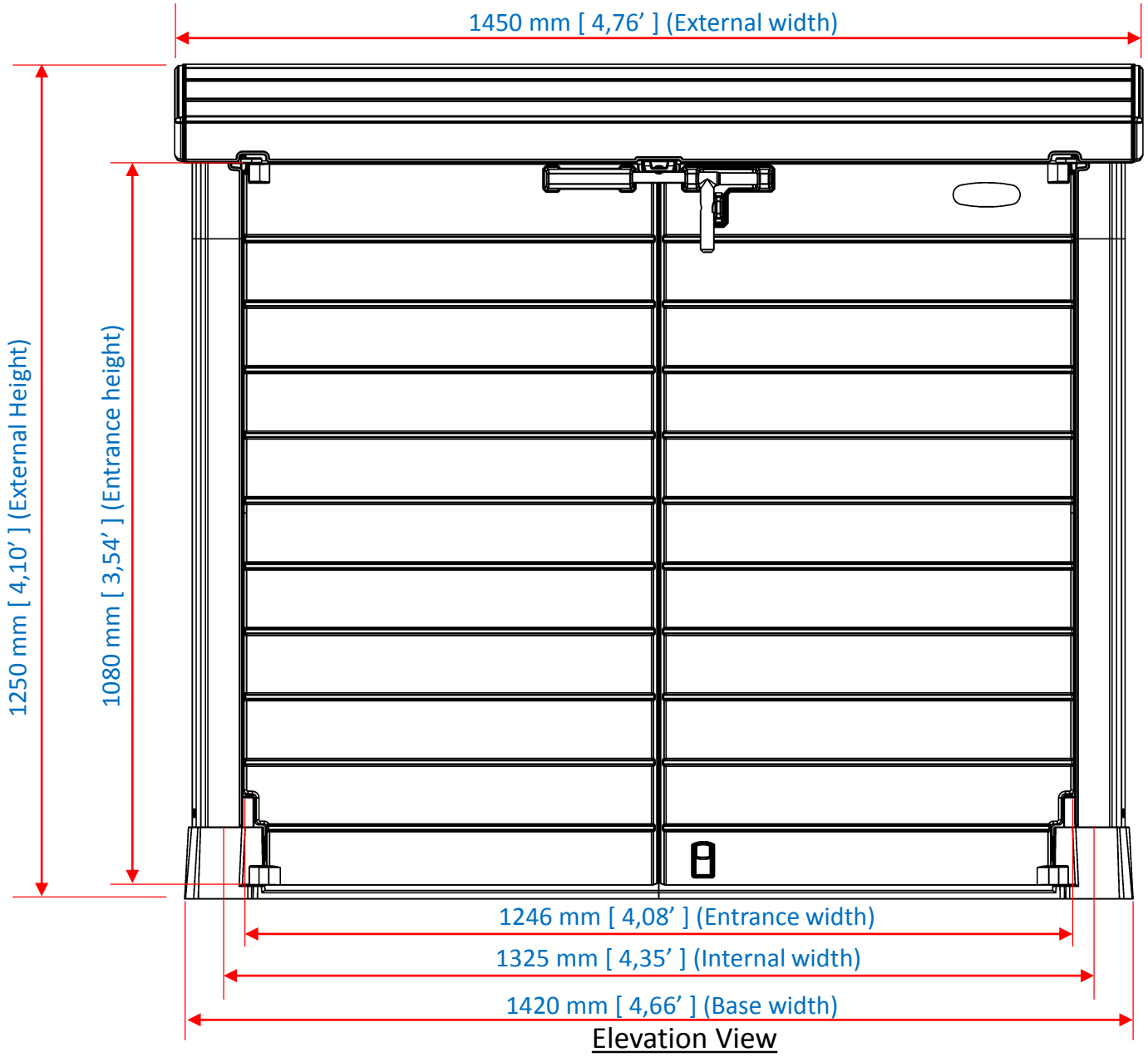

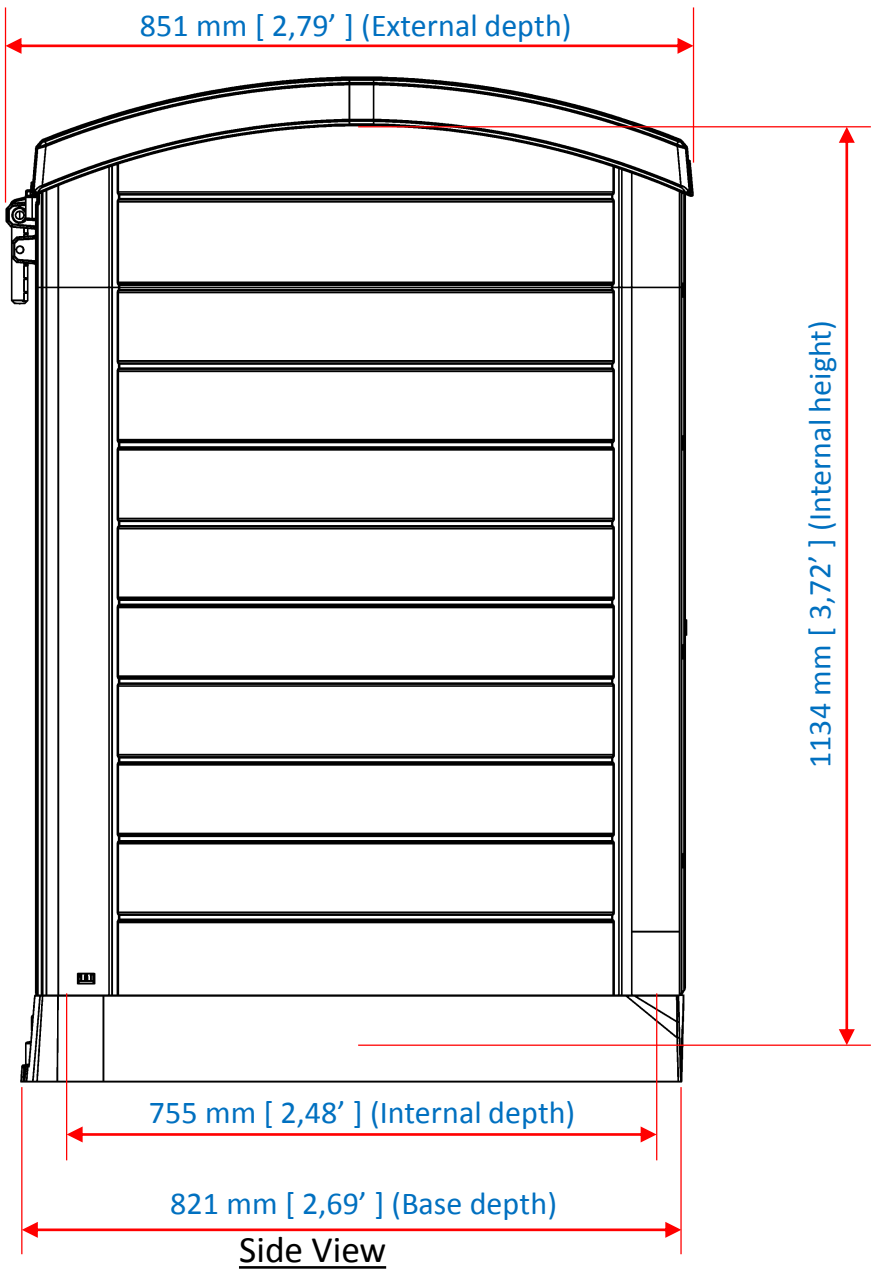

1200L Storage shed (Arc lid)

Note: Dimension tolerance +/- 5 mm.